REVISIONS				
ZONE	REV	DESCRIPTION	Date	APPROVED

SCHEMATIC

SHOWN IN FAILSAFE

POS 1 NORMALLY CLOSED

POS 1 (1–3 & 2–4)
POS 2 (1–2 & 3–4)

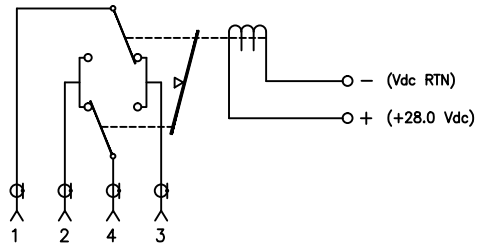

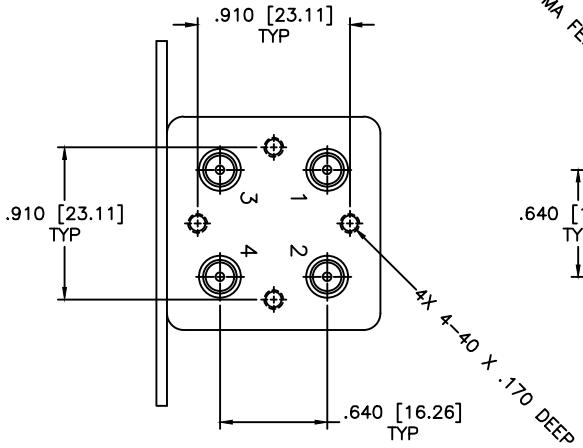

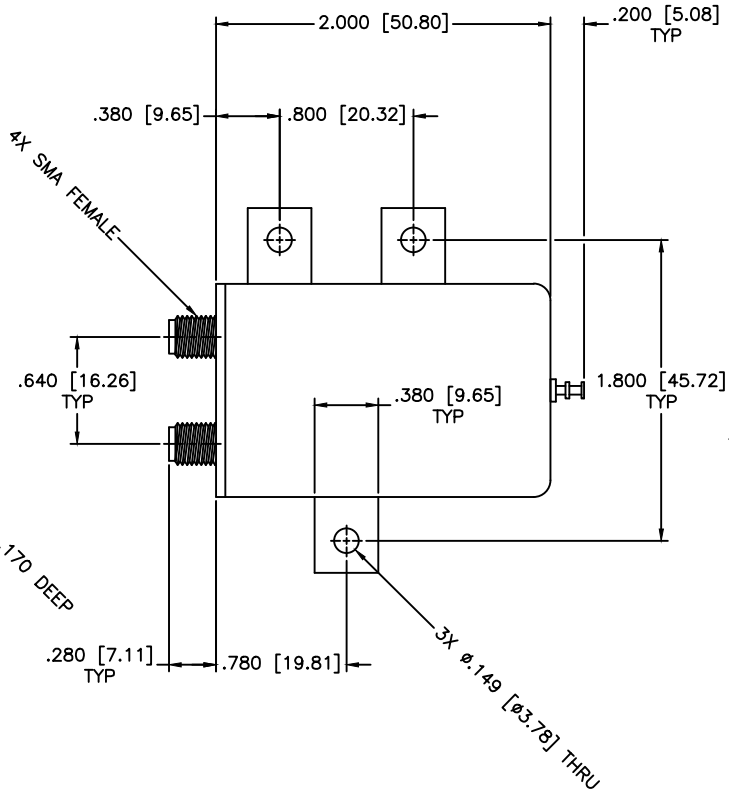

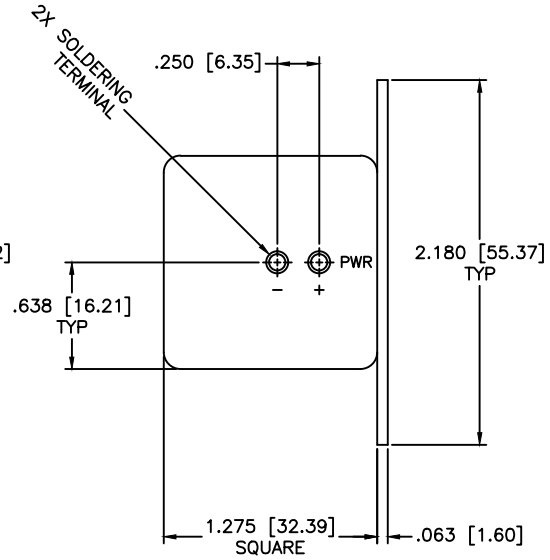

SPECIFICATIONS

FREQUENCY RANGE: DC–4.0 GHz
VSWR: 1.25:1 MAX.
INSERTION LOSS: 0.25dB MAX.
ISOLATION: 80dB MIN.

MECHANICAL

CONTACT: BREAK BEFORE MAKE
ACTUATOR: FAILSAFE
SWITCHING SPEED: 20 mSEC MAX

ELECTRICAL

ACTUATOR VOLTAGE: 28.0Vdc (22.0–32.0 Vdc)
ACTUATOR CURRENT: 125mA MAX @ 28.0 Vdc
POWER HANDLING: 200W CW @ 1.0GHz
IMPEDANCE: 50 Ohms

ENVIRONMENTAL

OPERATING TEMP: –54°C to +90°C
SINE VIBRATION: 30 G'S rms
LIFE: 1,000,000 CYCLES
RANDOM VIBRATION: 20 G'S rms

MATERIAL:

DRAWN: Paiboon Luekhamhan — DATE: 03-31-2001

APPROVED: T. Nguyen — DATE: 03-31-2001

MCLI

MICROWAVE COMMUNICATIONS LABORATORIES INC.
7255 30TH AVE. N. SAINT PETERSBURG, FL 33710
TEL: (727) 344–6254 FAX: (727) 381–6116
hhtp://WWW.MCLI.COM

UNLESS OTHERWISE SPECIFIED:
TOLERANCES
IN (INCHES) OR [mm] (MILLIMETERS)
FRACTIONS: ± 1/64
DECIMALS: ±.02 ±.009
ANGLE: ±1/2°

PROPRIETARY NOTICE:
THE INFORMATION IN THIS DRAWING IS PROPRIETARY AND SHALL NOT BE USED OR DISCLOSED WITHOUT WRITTEN PERMISSION FROM MICROWAVE COMMUNICATIONS LABORATORIES INC. (MCLI)

THIRD ANGLE PROJECTION

SCALE: N/A

SHEET: N/A

DRAWING TITLE: ELECTROMECHANICAL SWITCHES

PART NO. C1–3–F

CAGE CODE: 0D2L5

SIZE: N/A — REV: N/A

DO NOT SCALE THE DRAWING

DWG NO. 86095